Current Research and Reviews in Psychology and Psychiatry
2025; 5(2): 52-65

DOI: 10.65127/crrpp.1791332

ARAŞTIRMA MAKALESİ **RESEARCH ARTICLE**

Turkish Reliability and Validity Study of Trait Emotional Intelligence Scale

Gulsah BALABAN[1], Caner ERASLAN[2], Salma MOHAMED[2]

[1]Asst. Prof., Department of Psychology, Istanbul Sabahattin Zaim University, Istanbul, Türkiye
[2]Undergraduate Student, Department of Psychology, Istanbul Sabahattin Zaim University, Istanbul, Türkiye

Abstract

Objective: This study aimed to adapt the Trait Emotional Intelligence Scale (TEIS) into Turkish and to examine its psychometric properties in Turkish sample.

Method: A total of 778 adults aged 18 to 63 ($\bar{x}$±SD=37.79±12.15) participated in the study. Of the participants, 417 were female (53.6%) and 361 were male (46.4%). Confirmatory factor analysis was conducted to assess construct validity. Convergent validity was tested with the Rotterdam Emotional Intelligence Scale and Mentalization Scale. The scale's reliability was examined using internal consistency, test-retest, and split-half methods.

Results: Confirmatory factor analysis findings indicated that the original three-factor structure of the scale was confirmed in the Turkish sample, especially the bifactor model had the best fit indices. Convergent validity results revealed that the scale exhibited significant relationships with relevant constructs. Reliability analyses demonstrated adequate internal consistency and temporal stability.

Conclusion: The findings demonstrate that the Turkish version of the Emotional Intelligence Scale is a valid and reliable measurement tool for Turkish sample.

Keywords: Emotional Intelligence, Validity, Reliability

Duygusal Zekâ Ölçeği'nin Türkçe Geçerlik ve Güvenirlik Çalışması

Öz

Amaç: Bu çalışmada, Duygusal Zekâ Ölçeği'nin (DZÖ) Türkçeye uyarlanması ve psikometrik özelliklerinin Türk toplum örnekleminde incelenmesi amaçlanmıştır.

Yöntem: Çalışmaya 18-63 yaşları arasında toplam 778 yetişkin ($\bar{x}$±SS=37.79±12.15) katılmıştır. Katılımcıların 417'si kadın (%53.6), 361'i ise erkektir (%46.4). Yapı geçerliliğini değerlendirmek için doğrulayıcı faktör analizi yapılmıştır ve yakınsak geçerlilik için Rotterdam Duygusal Zekâ Ölçeği ve Zihinselleştirme Ölçeği kullanılmıştır. Ölçeğin güvenirliği iç tutarlılık analizi, test-tekrar test çalışması ve iki yarıya bölme yöntemi kullanılarak incelenmiştir.

Bulgular: Doğrulayıcı faktör analizi sonucunda, ölçeğin özgün üç faktörlü yapısının Türk örnekleminde de doğrulandığı, özellikle bifaktör modelin en iyi uyum indekslerine sahip olduğu belirlenmiştir. Yakınsak geçerlik analizleri sonucunda, ölçeğin kuramsal olarak ilişkili yapılarla anlamlı korelasyon değerlerine sahip olduğu tespit edilmiştir. Güvenirlik analizleri, ölçeğin iç tutarlılığının ve zamana karşı değişmezliğinin yeterli düzeyde olduğunu göstermiştir.

Sonuç: Elde edilen bulgular sonucunda, Duygusal Zekâ Ölçeği'nin Türkçe versiyonunun Türk toplumu için geçerli ve güvenilir bir ölçüm aracı olduğu tespit edilmiştir.

Anahtar Kelimeler: Duygusal Zekâ, Geçerlilik, Güvenilirlik

Received: 25.09.2025; **Revised:** 17.11.2025; **Accepted:** 07.12.2025; **Publication:** 29.12.2025

Citation: Balaban, G., Eraslan, C., & Mohamed, S. (2025). Turkish reliability and validity study of Trait Emotional Intelligence Scale. *Current Research and Reviews in Psychology and Psychiatry*, *5*(2), 52-65. https://doi.org/10.65127/crrpp.1791332

Corresponding Author: Gulsah BALABAN, İstanbul Sabahattin Zaim University, Psychology Department, Halkalı/Istanbul, gulsah.balaban@izu.edu.tr

Current Research and Reviews in Psychology and Psychiatry, adopts an open-access policy aiming to provide its content freely to the widest audience. All articles published by the journal are freely accessible and usable under the following licensing conditions: Creative Commons Attribution-NonCommercial License (CC BY-NC 4.0)

Introduction

Emotional intelligence (EI) is defined as an individual's ability to recognize, understand, and regulate their own and others' emotions, and to use this emotional information effectively in social interactions (Cherniss, 2010). Emotional intelligence was introduced by Salovey and Mayer (1990), reached a wider audience and gained popularity through the work of Goleman (1995). Goleman (1995) argued that emotional intelligence determines 80% of professional success and suggested that social competencies such as motivation and social skills should also be considered within this framework. However, this broad scope has been criticized by some researchers that Goleman's model, which combines numerous different skills under the same umbrella, has created conceptual ambiguities (Mayer et al., 2000; Matthews et al., 2002). In particular, scholars have emphasized that Goleman's competency-based model incorporates a wide range of behavioral, personality-related, and organizational skills such as leadership, adaptability, conscientiousness, and conflict management that extend beyond emotional processing itself. As highlighted by Fernández-Berrocal and Extremera (2006), this blending of emotional abilities with broader workplace competencies has resulted in limited empirical support for Goleman's model compared to more clearly defined ability-based approaches, further reinforcing concerns regarding the conceptual breadth and measurement challenges associated with his framework.

Moreover, recent meta-analytic evidence strongly challenges Goleman's expansive claims regarding the predictive power of EI. Joseph and Newman's (2010) integrative meta-analysis showed that EI does not predict job performance to the extent suggested by Goleman; ability-based and self-report ability EI measures demonstrated only weak and inconsistent associations with performance, while mixed EI models provided incremental prediction primarily in occupations with high emotional-labor demands. In low emotional-labor jobs, the EI–performance relationship was negligible or even negative, indicating that EI is far from a universal predictor of workplace success. These findings suggest that Goleman's assertion that emotional competencies outweigh cognitive abilities across all occupations is not empirically supported, further reinforcing concerns about the conceptual breadth and measurement limitations of his model.

At the theoretical level, emotional intelligence is considered by some researchers as an ability (Mayer et al., 2000), by others as a personality-based trait (Petrides & Furnham, 2001), and by others as a mixed model as emotional-social intelligence (Bar-On, 2006). According to ability model (Mayer et al., 2016), emotional intelligence consists of four subdimensions: perception of emotions, use of emotional information, understanding of emotions, and management of emotions. This structure emphasizes the integration of emotions with mental processes. On the other hand, Petrides and Furnham (2001), by proposing the concept of "temperamental emotional intelligence," argued that emotional intelligence is a personality trait based on an individual's self-perception, reflecting their way of knowing and evaluating themselves. According to them, how emotional intelligence is conceptualized determines the nature of the construct, as does how it is measured and ability emotional intelligence should be assessed through performance tests, while temperament emotional intelligence should be assessed through self-report scales. Finally, the mixed model conceptualizes EI as a broader set of emotional and social competencies, skills, and facilitators that extend beyond cognitive-emotional processing. In this model, EI encompasses intrapersonal abilities (self-regard, emotional self-awareness, assertiveness), interpersonal competencies (empathy, social responsibility, relationship building), stress management (stress tolerance, impulse control), adaptability (reality testing, flexibility, problem solving), and general mood (optimism, happiness) (Bar-On, 2006).

The role of emotional intelligence in psychological health is supported by a growing number of studies in the literature. Individuals with high emotional intelligence have been shown to have stronger coping skills, greater interpersonal success, and higher life satisfaction (Schutte et al., 2007; Palmer et al., 2002). Emotional intelligence has also been reported to be a determining variable in areas such as work performance (O'Boyle et al., 2011) and academic achievement (MacCann et al., 2020). However, as Lee and Kwak (2012) emphasize, monitoring these positive effects in a practical manner in the field depends not only on conceptual but also on the availability of valid and reliable measurement tools.

At this point, scales based on different theoretical foundations have been developed to measure emotional intelligence. The Mayer-Salovey-Caruso Emotional Intelligence Test (MSCEIT) (Mayer et al., 2002), based on the ability model, directly assesses individuals' emotional information processing abilities through performance tasks. Temperament-based scales such as the Trait Emotional Intelligence Scale (TEIQue-SF) (Petrides, 2009) and the Schutte Self-Report Inventory (SSRI) (Schutte et al., 1998) measure individuals' self-perceptions of emotions. Mixed-structure scales such as the Bar-On Emotional Quotient Inventory (EQ-i) (Bar-On, 2004) encompass both personality traits and social-emotional competencies. However, Lee and Kwak (2012) note that most existing scales were developed independently of cultural context, which can lead to measurement problems, especially in Eastern societies.

To overcome these limitations, Lee and Kwak (2012) developed a self-report-based, theoretically robust EI scale for Korean adults that takes cultural specificity into account. The scale is based on Mayer and Salovey's (1997) four-dimensional model and aims to measure individuals' subjective assessments of their own emotional competence within the framework of the temperament approach. Furthermore, the concept of "jeong" (closeness, attachment, affection, and sometimes the coexistence of opposing emotions), considered a unique emotion in Korean culture (Chung & Oh, 2022), was also considered in some item content. Similarly, Turkish culture includes comparable notions such as "bond of the heart" (gönül bağı) or "sincere attachment" (içtenlikle bağlanma), which emphasize deep interpersonal ties and enduring emotional connections (Turkish Language Association [TDK], 2025), suggesting a cultural parallel in the way relational emotions are experienced.

Moreover, although there are various scales in the literature to measure emotional intelligence, a significant portion of these tools have limitations in terms of theoretical consistency and cultural sensitivity (Bar-On, 2004; Mayer et al., 2002; Petrides, 2009; Schutte et al., 1998). Some of the existing scales blur the boundaries of the structure because they consider emotional intelligence together with broad personality traits (Petrides, 2009), while others cannot adequately reflect culture-specific emotional experiences because they were developed in Western culture (Mayer et al., 2002; Schutte et al., 1998). The point where TEIS differs from other scales is that takes into account culture-specific emotional expressions. Therefore, adapting TEIS to Turkish provides a conceptually clearer measurement tool and it is aimed to fill an important gap in the literature by providing a reliable alternative measurement tool.

Within this context, in this study, Turkish adaptation of the Trait Emotional Intelligence Scale (TEIS), developed by Lee and Kwak (2012), and examination of its psychometric properties was aimed. Testing the validity of the scale in a Turkish adult sample is an important step toward making cross-cultural comparisons. Examining how emotional representations specific to Korean culture are reflected in Turkish culture will contribute not only to measurement validity but also to theoretical studies investigating the impact of culture on emotions. Furthermore, it aims to introduce a new instrument to the Turkish psychological literature that assesses emotional intelligence multidimensionally and with cultural sensitivity.

Method

Participants

The study was conducted on 778 participants: 417 of which are women (53.6%) while 361 are men (46.4%). The age ranged from 18 to 63 ($\bar{x}\pm SD=37.79\pm12.15$). 299 of the participants were single (38.4%), 442 were married (56.8%), 29 were divorced (3.7%), and 8 of them had a deceased spouse (1%). In terms of perceived economic level, 148 of the participants reported low (19%), 569 reported middle (73.1%), and 61 reported high economic status (7.8%). When it comes to receiving psychological or psychiatric help, 261 participants reported receiving help before (33.5%), 77 reported presently receiving help (9.9%), while 324 participants reported feeling the need to receive help (41.6%).

The sample size of 778 used in this study appears statistically sufficient to conduct a confirmatory factor analysis testing a three-factor structure consisting of 20 items. One general rule for CFA is that the sample size should be at least 20 times the number of items (Kline, 2016). The sample size in the current study met this criterion. Furthermore, according to RMSEA-based power analyses by MacCallum and colleagues (1996), samples of approximately 400-600 people provide 80-90% power for models with moderate factor loadings and degrees of freedom in the range of 150-170. In our study, the models (df=170 for the single-factor model; df=167 for the first-level model; df=170 for the second-level model; df=150 for the bifactor model) were tested with a sample size of 778 people, and the calculations indicated that the statistical power of these models was approximately 99%. In this context, it can be said that the current sample of 778 people allows for reliable estimation of three-factor and bifactor models and precise evaluation of fit indices.

Measurement Tools

Demographic information form

A researcher-developed questionnaire was used to collect demographic data, including gender, age, marital status, economic status, and history of psychological or psychiatric support. This form was used to describe the sample characteristics and to control for potential demographic differences in the analyses.

Trait Emotional Intelligence Scale (TEIS)

The Trait Emotional Intelligence Scale developed by Lee and Kwak (2012) assesses emotional intelligence through a multidimensional approach. The scale comprehensively examines emotional intelligence as a steady personality trait by accounting dimensions of self-regulation, social relationships and adaptability. The 20-item measure uses a 5-point Likert-type response format (1=Strongly Disagree to 5=Strongly Agree). EFAs of the original scale have demonstrated a three-factor result with item loadings ranging from 0.65 to 0.83. CFA supported the three-factor solution with fit indices of CFI=0.93, TLI=0.91, and RMSEA=0.05. Internal consistency was good, with Cronbach's alpha coefficients of 0.82 for emotional awareness, 0.85 for emotional regulation, and 0.78 for

emotional utilization. The overall scale was 0.87 for Cronbach's alpha. In the present study, TEIS was administered as the primary measure to evaluate trait emotional intelligence and to validate the Turkish adaptation of the scale.

Rotterdam Emotional Intelligence Scale (REIS)

The Rotterdam Emotional Intelligence Scale, developed by Pekaar et al. (2018), measures emotional intelligence through four dimensions: self-emotion appraisal, others' emotion appraisal, self-emotion regulation, and others' emotion regulation. The 28-item scale employs a 5-point Likert response format The Turkish adaptation by Tanrıöğen and Türker (2019) confirmed its reliability and validity with Cronbach's alpha values of 0.89-0.93 for subscales and 0.94 for the total score. These strong psychometric properties ensure its suitability as a comparative tool. In this study, REIS was used to assess convergent and incremental validity by examining its associations with the TEIS scores.

Mentalization Scale (MentS)

Originally developed by Dimitrijević et al. (2018), the Mentalization Scale (MentS) assesses individuals' mentalization abilities across three dimensions: self-related mentalization, other-related mentalization, and motivation to mentalize. The scale consists of 28 items rated on a 5-point Likert scale. The Turkish adaptation by Törenli-Kaya et al. (2023) demonstrated strong reliability, with Cronbach's alpha values of 0.78, 0.80, and 0.79 for the respective subscales and 0.84 for the total scale, confirming its suitability for research. In this study, the MentS was used to examine convergent validity.

Brief Symptom Inventory (BSI)

Originally developed by Derogatis (1992) and adapted to Turkish by Şahin and Durak (1994), the Brief Symptom Inventory (BSI) is a 53-item self-report measure. The total score reflects overall distress levels, with higher scores indicating more severe symptoms. The Turkish adaptation has demonstrated strong reliability, with Cronbach's alpha values ranging from 0.85 to 0.93 for individual subscales and 0.95 for the total score, as well as a test-retest reliability coefficient of 0.87, confirming its stability over time. In the current study, the BSI was utilized to evaluate the predictive validity of the TEIS by examining the associations between emotional intelligence and psychological distress symptoms.

Procedure

The ethics approval was obtained from Istanbul Sabahattin Zaim University ethics committee with date 31.10.2024 and numbered 2024/08, and also permission from the original scale developers to adapt the Trait Emotional Intelligence Scale were acquired before starting the study. The scale items were translated from Korean into Turkish by a panel of five experts, two clinical psychologists familiar with emotional intelligence theory and three Korean-Turkish bilingual language specialists. The translated version was then pilot-tested with ten individuals from the target age group (18-65 years) to evaluate comprehension and clarity. Participants provided feedback on item readability and meaning, which then led to revisions being made. The back-translation process following the pilot study was conducted by two independent Korean-Turkish bilingual translators. This version was compared with the original to ensure conceptual and linguistic equivalence. The final version was reviewed by the original scale developers for approval. Additionally, three Turkish language specialists examined the translated items for linguistic validity. Any inconsistencies were addressed before finalizing the adapted scale.

Data gathering was carried out using a Google Forms link shared with participants, including an informed consent form to assure participants that participation is anonymous as well as voluntary and they have the right to withdraw at any time. The form took approximately 15 minutes to complete.

Data Analysis

Test-retest administration was conducted two weeks apart because, as recommended in the psychometric literature, 1–4-week intervals are considered the most appropriate period to assess the temporal stability of measurements (Kline, 2015; McCrae et al., 2011). Test-retest reliability was evaluated using Pearson product-moment correlation coefficients, with the significance level set at $p<0.05$. Convergent validity was evaluated by correlating the TEIS with the Rotterdam Emotional Intelligence Scale and the Mentalization Scale using Pearson correlation analysis. Predictive validity was examined using the Brief Symptom Inventory, with multiple regression analysis conducted to determine the predictive relationship between emotional intelligence and psychological distress factors such as depression, anxiety, somatization and obsessive-compulsive disorder. An independent samples t-test was performed to explore whether the variables are differentiated across genders. Confirmatory factor analysis (CFA) was conducted to validate the factor structure, with model fit indices including AGFI, GFI, CFI, RMSEA and AIC. Confirmatory factor analysis (CFA) was employed because the Trait Emotional Intelligence Scale has an established theoretical structure consisting of three dimensions proposed by Lee and Kwak (2012), and the aim of this adaptation study was to verify whether this predefined structure is replicated within the Turkish sample. CFA is the recommended method in scale adaptation and construct validation studies, as it allows testing of a hypothesized factor model based on prior theory and empirical evidence (Brown, 2015). In line with the three-dimensional structure proposed by the scale's developers (Lee & Kwak, 2012), the first-order model was tested. Because emotional intelligence can theoretically be

considered both multidimensional and hierarchical, the second-order model was evaluated to examine whether the three subdimensions loaded on a higher-level general factor. Furthermore, bifactor models are recommended for personality-based emotional intelligence scales because they can simultaneously model both a general tendency and specific subdimensions (Reise, 2012). Therefore, all three models were tested in this study to comprehensively evaluate the factor structure of the scale.

Results

Validity Results

Results of explanatory factor analysis

An exploratory factor analysis was conducted to examine the structural validity of the scale. The data were suitable for factor analysis, as indicated by a Kaiser-Meyer-Olkin value of 0.887 and a significant Bartlett's Test of Sphericity ($\chi^2_{(190)}$=4011.68, p<0.001). Principal component analysis with varimax rotation revealed a clear three-factor solution. The three extracted components had eigenvalues greater than 1 (5.25, 2.46, and 1.16) and together accounted for 44.36% of the total variance. After rotation, the first factor explained 19.76% of the variance, the second factor 15.29%, and the third factor 9.31%. Factor loadings were consistent with the theoretical structure of the scale. Items reflecting emotional recognition showed loadings between 0.44 and 0.61, emotional facilitation items loaded between 0.33 and 0.61, and emotional regulation items loaded between 0.44 and .69. Item means ranged from 3.06 to 4.37, and standard deviations from 0.70 to 1.18. Overall, the exploratory analysis supported a coherent three-factor structure and demonstrated that the scale items loaded meaningfully onto their respective theoretical dimensions (Kline, 2015) (**Table 1**).

Table 1. Factor Loadings, Means, and Standard Deviations of the Items

	Factor 1: Emotional Recognition/Understanding	**1**	**2**	**3**	**x̄**	**SD**
1	I can recognize others' feelings and moods even when I do not know them very well. (Başkalarını çok iyi tanımasam bile onların duygularını ve ruh hallerini anlayabilirim.)	0.61			3.79	0.85
2	I can recognize others' feelings and moods through voices, tones, and facial expressions. (Başka insanların duygularını ve ruh hallerini onların ses tonlarından ve yüz ifadelerinden anlayabilirim.)	0.53			4.03	0.70
3	I can label emotions of self and others. (Kendi duygularımı ve başkalarının duygularını isimlendirebilirim.)	0.44			3.81	0.74
4	I understand the emotions and feelings expressed in pictures and music. (Resimlerde ve müzikte ifade edilen duyguları ve hisleri anlayabilirim.)	0.54			3.86	0.86
5	I understand that there are complicated and delicate feelings and emotions. (Karmaşık ve hassas duyguların veya hislerin var olduğunu anlayabilirim.)	0.57			3.71	0.84
6	I understand that a person can love and hate someone at the same time. (Bir insanın diğer bir insandan aynı anda hem nefret edip hem de onu sevebileceğini anlayabilirim.)	0.50			3.33	1.17
	Factor 2: Emotional Facilitation	**1**	**2**	**3**	**x̄**	**SD**
7	If I have to do something I do not like, I try to change my mind and enjoy it. (Hoşlanmadığım bir şeyi yapmak zorunda kalırsam fikrimi değiştirmeye ve bundan keyif almaya çalışırım.)		0.38		3.06	1.13
8	When I feel empty after completing a task, I try to cheer up and be ready for the next event. (Bir görevi tamamladıktan sonra kendimi boş hissettiğimde neşelenmeye çalışır ve bir sonraki etkinlik için hazır olurum.)		0.61		3.74	0.95
9	When I do not feel like doing my work, I try my best to overcome my feelings. (Bir işi yapmak istemediğimde, duygularımın üstesinden gelmek için elimden geleni yaparım.)		0.55		3.76	0.95
10	If I hear good news about my colleague, I feel glad and want to celebrate together. (Eğer meslektaşım hakkında iyi bir haber duyarsam, mutlu olur ve beraber kutlamak isterim.)		0.37		4.37	0.71
11	I try to forget bad things quickly. (Kötü şeyleri çabucak unutmaya çalışırım.)		0.33		3.23	1.18
12	When I feel afraid of something, I do not avoid but encounter it. (Bir şeyden korktuğumda kaçmak yerine korkumla yüzleşirim.)		0.56		3.39	1.04
	Factor 3: Emotional Regulation	**1**	**2**	**3**	**x̄**	**SD**
13	I can control my feelings well. (Duygularımı iyi bir şekilde kontrol edebilirim.)			0.66	3.43	0.98
14	I can change my moods when I feel depressed. (Depresif hissettiğimde ruh halimi değiştirebilirim.)			0.65	3.16	1.02
15	I have my own way to cheer up when I feel down. (Kendimi kötü hissettiğimde neşelenmek için kendi yöntemlerim vardır.)			0.59	3.62	0.97
16	I know how to calm down anger. (Öfkemin üstesinden gelmeyi bilirim.)			0.57	3.43	1.02
17	I can change my emotions according to the situation. (Duygularımı duruma göre değiştirebilirim.)			0.56	3.59	0.88
18	I do not lose hope even when things do not go well. (İşler yolunda gitmediğinde bile umudumu kaybetmem.)			0.63	3.66	1.02
19	I can reprioritize my actions to do things in order. (İşlerimi düzenli yapmak için duygularımı düzenleyebilirim.)			0.69	3.76	0.86
20	I can console and comfort others effectively. (Başkalarını etkili bir biçimde teselli edebilir ve rahatlatabilirim.)			0.44	3.95	0.91

Results of confirmatory factor analysis

The single-factor model exhibited a poor fit to the data ($\chi^2_{(170)}$=1401.96, p<0.001, χ^2/df=8.25, AGFI=0.742, GFI=0.792, CFI=0.681, RMSEA=0.097 (90% CI [0.092, 0.101]), AIC=1481.96). These results suggest that the single-factor structure does not adequately capture the underlying latent structure (Hu & Bentler, 1999) (**Figure 1**) (**Table 2**).

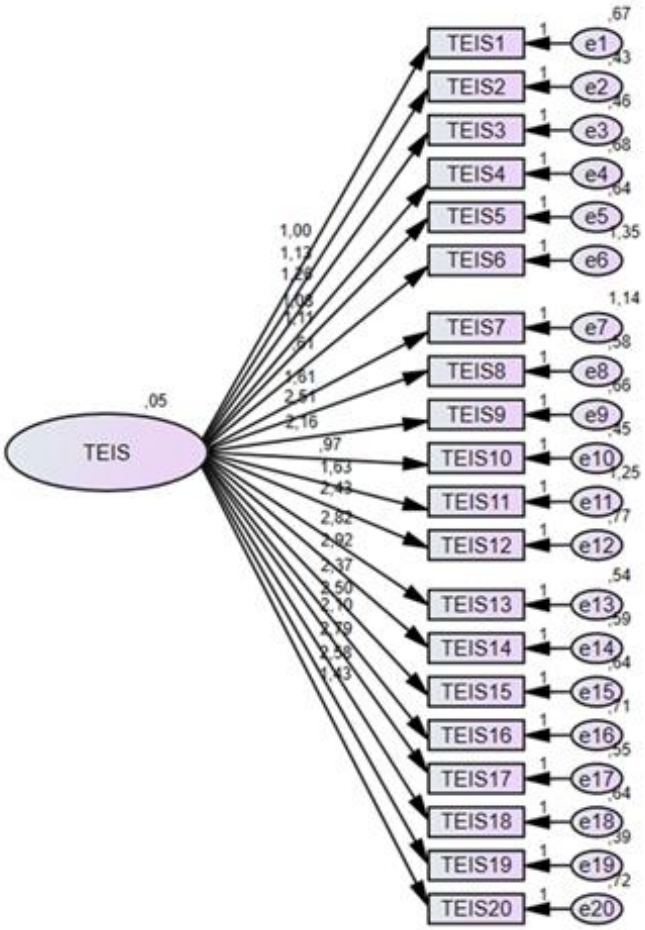

Note. In the figure the standardized coefficients are given.

Figure 1. The Results of CFA Analysis for Single Factor Model

The first-order model demonstrated a relatively better fit compared to the single-factor model ($\chi^2_{(167)}$=655.62, p<0.001, χ^2/df=3.93, AGFI=0.900, GFI=0.921, CFI=0.873, RMSEA=0.061 (90% CI [0.056, 0.066]), AIC=741.62). These values suggest an acceptable but not optimal model fit (Hu & Bentler, 1999) (**Figure 2**) (**Table 2**).

The second-order model showed a relatively poor fit, similar to the single-factor model ($\chi^2_{(170)}$=1401.96, p<0.001, χ^2/df=8.25, AGFI=0.742, GFI=0.792, CFI=0.681, RMSEA=0.097 (90% CI [0.092, 0.101]), AIC=1481.96). These values indicate that the hierarchical structure may not be well-suited for the data (Hu & Bentler, 1999) (**Figure 3**) (**Table 2**).

The bifactor model provided the best fit among all models ($\chi^2_{(150)}$=499.62, p<0.001, χ^2/df=3.33, AGFI=0.915, GFI=0.939, CFI=0.909, RMSEA=0.055 (90% CI [0.050, 0.060]), AIC=619.62). These indices indicate a well-fitting model, suggesting that a bifactor structure better explains the data compared to the other models (Hu & Bentler, 1999) (**Figure 4**) (**Table 2**).

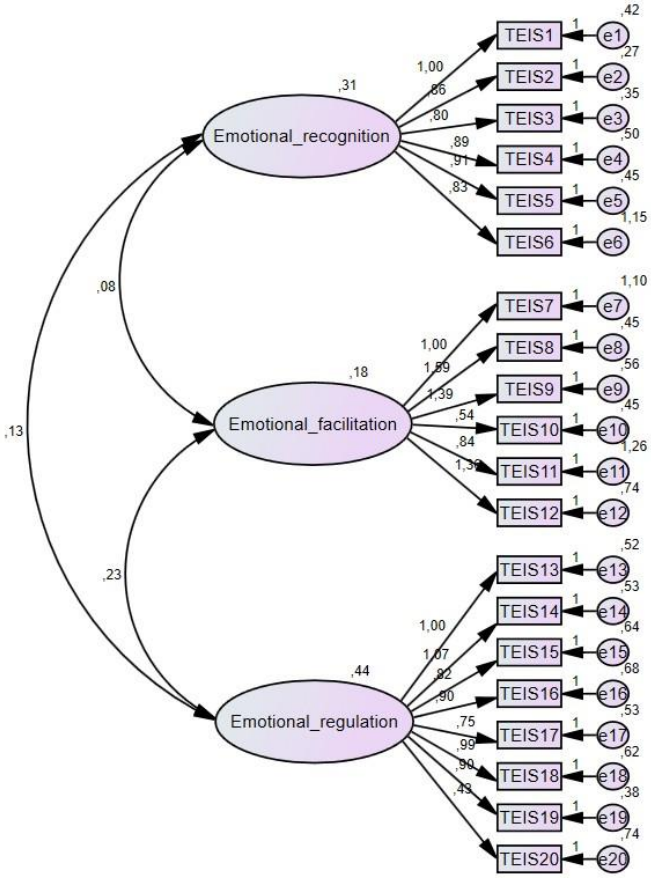

Note. In the figure the standardized coefficients are given.

Figure 2. The Results of First Order CFA Analysis

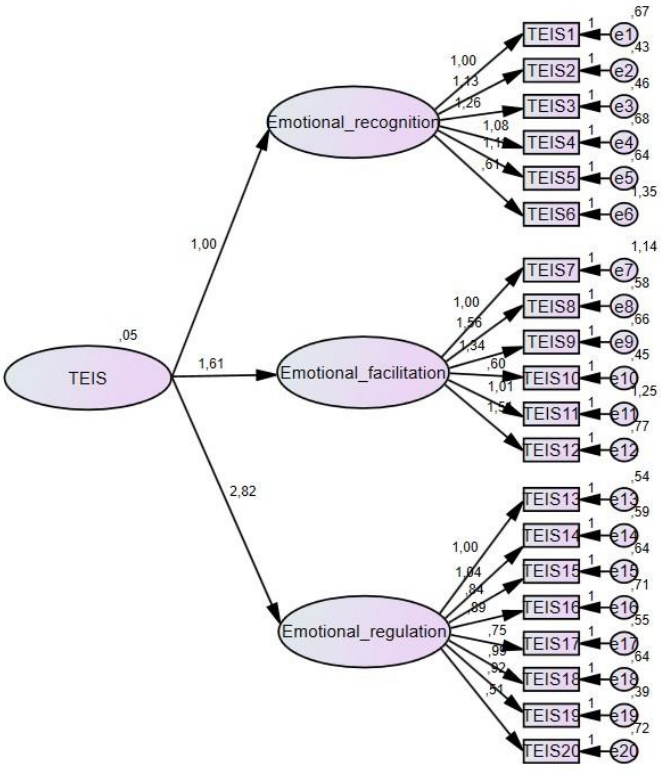

Note. In the figure the standardized coefficients are given.

Figure 3. The Results of Second Order CFA Analysis

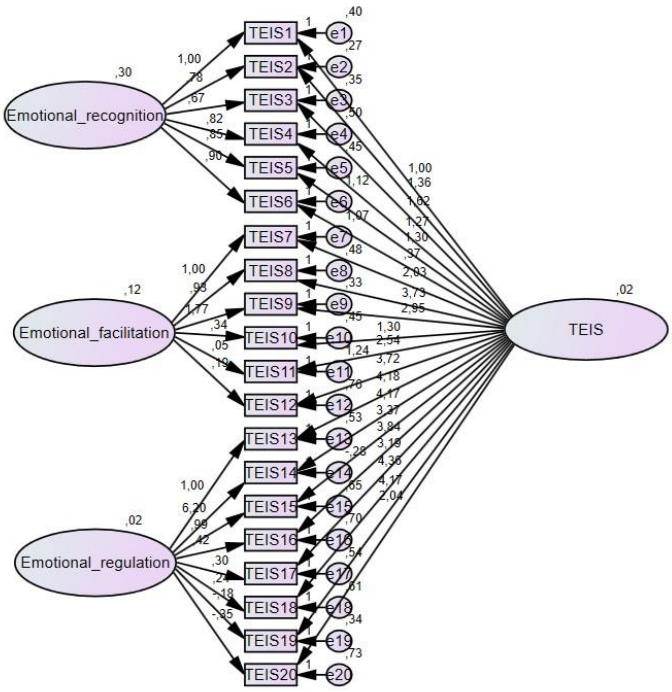

Note. In the figure the standardized coefficients are given.

Figure 4. The Results of CFA Analysis for Bi-factor Model

Results of convergent validity analysis

To assess convergent validity, Pearson correlation coefficients were computed between subscales and total scores of the Trait Emotional Intelligence Scale (TEIS), the Rotterdam Emotional Intelligence Scale (REIS), and the Mentalization Scale (MentS). As expected, the total score of TEIS was strongly correlated with the total score of REIS ($r=0.69$, $p<0.01$) and MentS ($r=0.46$, $p<0.01$), supporting convergent validity (Kline, 2015). Significant correlations were also found among the subscales of TEIS, REIS, and MentS, further supporting the convergent validity of the TEIS (Cheung et al., 2024) (**Table 3**).

Results of incremental validity analysis

Hierarchical regression analyses were performed to evaluate the incremental validity of the Trait Emotional Intelligence Scale (TEIS) beyond the Rotterdam Emotional Intelligence Scale (REIS) in predicting psychological symptoms. In the first step, REIS significantly predicted depression, anxiety, obsessive-compulsive symptoms, and somatization, explaining between 2% and 7% of the variance. In the second step, the addition of TEIS total scores significantly improved the models, with ΔR^2 values ranging from 0.03 to 0.06. For depression, REIS was no longer a significant predictor once TEIS was entered, and TEIS explained an additional 6% of variance. A similar pattern was observed for anxiety and obsessive-compulsive symptoms, where TEIS added significant incremental variance ($\Delta R^2=0.03$ and 0.04, respectively), and REIS effects diminished. For somatization, TEIS again contributed incremental variance ($\Delta R^2=0.03$), while REIS became nonsignificant. Overall, these findings indicate that TEIS provides incremental validity over REIS in predicting multiple forms of psychopathological symptoms (Kline, 2015) (**Table 4**).

Table 2. Fit Indices for the CFA Models

Fit Indices	Good Fit İndices	Acceptable Fit Indices	Single Factor Model	First Order Model	Second Order Model	Bifactor Model
χ^2/df[1]	$0\leq\chi^2/df\leq2$	$2\leq\chi^2/df\leq5$	8.25	3.93	8.25	3.33
RMSEA[2]	$0.00\leq RMSEA\leq0.05$	$0.05\leq RMSEA\leq0.08$	0.09	0.06	0.09	0.05
GFI[3]	$0.95\leq GFI\leq1.00$	$0.90\leq GFI\leq0.95$	0.79	0.92	0.79	0.94
AGFI[4]	$0.90\leq AGFI\leq1.00$	$0.85\leq AGFI\leq0.90$	0.74	0.90	0.74	0.92
CFI[5]	$0.95\leq CFI\leq1.00$	$0.90\leq CFI\leq0.95$	0.68	0.87	0.68	0.91
AIC[6]	-	-	1481.96	741.62	1481.96	619.62

[1]χ^2/df: The ratio of chi-square value to degrees of freedom; [2]RMSEA: Root Mean Square Error of Approximation; [3]GFI: Goodness of Fit Index; [4]AGFI: Adjusted Goodness of Fit Index; [5]CFI: Comparative Fit Index; [6]AIC: Akaike Information Criterion (Hu & Bentler, 1999)

Reliability Analysis

Results of internal consistency

The internal consistency of the scale was assessed using Cronbach's alpha coefficients for each subscale and the total score. The results indicated satisfactory reliability for all subscales. Specifically, the Emotional Recognition subscale demonstrated good reliability ($\alpha=0.74$), while the Emotional Facilitation subscale exhibited acceptable internal consistency ($\alpha=0.62$). The Emotional Regulation subscale showed strong reliability ($\alpha=0.81$). Additionally, the total scale score demonstrated a strong internal consistency ($\alpha=0.84$) again. These values suggest that the scale is a reliable measure (Kline, 2015) (**Table 5**).

In addition, normality testing for the scale was conducted using skewness kurtosis values. The skewness (between -0.38 and -0.10) and kurtosis (between -0.29 and 1.68) values of all subscales included in this study are within ±2, indicating that the data are close to a normal distribution and parametric analyses can be performed (Tabachnick & Fidell, 2007).

Results of test – retest analysis

In order to examine the temporal stability of the scale, a test–retest reliability study was conducted by administering the same scale to the participants at two different time points. The results indicated that the "Emotional Recognition" subscale showed a statistically significant correlation between the first and second administrations ($r=0.66$, $p<0.001$). The "Emotional Facilitation" subscale also demonstrated a significant correlation over time ($r=0.59$, $p<0.001$). The "Emotional Regulation" subscale yielded a

Table 3. Results of Convergent Validity Analysis

	1	2	3	4	5	6	7	8	9	10	11	12	13
1. TEIS Emotional Recognition	1.00												
2. TEIS Emotional Facilitation	0.25**	1.00											
3. TEIS Emotional Regulation	0.30**	0.62**	1.00										
4. TEIS Total	0.62**	0.80**	0.88**	1.00									
5. REIS Self-Focused Emotion Appraisal	0.32**	0.41**	0.55**	0.57**	1.00								
6. REIS Other-Focused Emotion Appraisal	0.58**	0.24**	0.33**	0.48**	0.47**	1.00							
7. REIS Self-Focused Emotion Regulation	0.10**	0.43**	0.59**	0.52**	0.40**	0.25**	1.00						
8. REIS Other-Focused Emotion Regulation	0.47**	0.28**	0.39**	0.49**	0.36**	0.59**	0.29**	1.00					
9. REIS Total	0.49**	0.46**	0.63**	0.69**	0.74**	0.77**	0.66**	0.77**	1.00				
10. MentS Motivation	0.46**	0.20**	0.19**	0.35**	0.29**	0.54**	0.02	0.36**	0.40**	1.00			
11. MentS Others	0.62**	0.34**	0.45**	0.60**	0.58**	0.69**	0.24**	0.56**	0.70**	0.56**	1.00		
12. MentS Self	0.07*	0.10**	0.17**	0.16**	0.36**	0.17**	0.04	0.03	0.20**	0.29**	0.26**	1.00	
13. MentS Total	0.47**	0.27**	0.35**	0.46**	0.54**	0.57**	0.12**	0.38**	0.54**	0.77**	0.76**	0.75**	1.00

*p<0.05, **p<0.01

Note: TEIS: Trait Emotional Intelligence Scale, REIS: Rotterdam Emotional Intelligence Scale, MentS=Mentalization Scale

strong test-retest correlation (r=0.77, p<0.001). Finally, the total score of the scale demonstrated high correlation (r=0.81, p<0.001). These results suggest that the scale and its subdimensions exhibit acceptable stability over time (Kline, 2015; McCrae et al., 2011) (**Table 6**).

Results of split-half reliability analysis

The internal consistency of the scale was further assessed using a split-half reliability analysis. The results indicated that Part 1, which included 10 items (TEIS1-TEIS10), demonstrated a Cronbach's alpha of 0.72, while Part 2, consisting of the remaining 10 items (TEIS11-TEIS20), exhibited a higher Cronbach's alpha of 0.81. Furthermore, the Spearman-Brown coefficient, which adjusts for test length, was 0.65 for both equal and unequal lengths, indicating acceptable reliability. The Guttman split-half coefficient was also computed and yielded a value of 0.64. These results suggest that the scale exhibits an acceptable of internal consistency (Kline, 2015).

Table 4. Results of Incremental Validity Analysis

Dependent Variables		Predictor	B	β	t	p	95% CI	R²
Depression	1	REIS	-0.09	-0.27	-7.80	**<0.001**	[-0.11, -0.07]	0.07
	2	REIS	-0.01	-0.04	-0.92	0.358	[-0.05, 0.02]	0.13
		TEIS	-0.18	-0.33	-7.04	**<0.001**	[-0.24, -0.13]	
Anxiety	1	REIS	-0.07	-0.24	-6.74	**<0.001**	[-0.09, -0.05]	0.06
	2	REIS	-0.02	-0.06	-1.35	0.178	[-0.05, 0.01]	0.09
		TEIS	-0.13	-0.25	-5.18	**<0.001**	[-0.17, -0.08]	
OCD	1	REIS	-0.08	-0.25	-7.27	**<0.001**	[-0.10, -0.06]	0.06
	2	REIS	-0.02	-0.07	-1.55	0.121	[-0.05, 0.01]	0.10
		TEIS	-0.14	-0.26	-5.47	**<0.001**	[-0.19, -0.09]	
Somatization	1	REIS	-0.04	-0.13	-3.65	**<0.001**	[-0.07, -0.02]	0.02
	2	REIS	0.01	0.02	0.42	0.674	[-0.03, 0.04]	0.04
		TEIS	-0.12	-0.22	-4.46	**<0.001**	[-0.18, -0.07]	

Note. REIS: Rotterdam Emotional Intelligence Scale, TEIS: Trait Emotional Intelligence Scale

Results of Independent Samples t-Test Analysis According to Gender

An independent samples t-test was conducted to examine gender differences across the emotional intelligence subscales and also its total score. For Emotional Recognition, females scored higher than males ($t_{(776)}$=2.52, p=0.012, 95% CI [0.13, 1.10]). For Emotional Facilitation, females scored lower than males ($t_{(776)}$=-3.15, p=0.002, 95% CI [-1.29, -0.30]). For Emotional Regulation, females again scored lower than males ($t_{(776)}$=-2.68, p=0.008, 95% CI [-1.66, -0.25]). Finally, for the Emotional Intelligence Total score, females scored slightly lower than males, but this difference was not found to be statistically significant ($t_{(776)}$=-1.69, p=0.092, 95% CI [-2.45, 0.19]) (**Table 7**).

Results of One-Way ANOVA According to Age Groups

A one-way analysis of variance (One-Way ANOVA) was conducted to compare emotional recognition, emotional facilitation, emotional regulation, and TEIS total scores across four age groups: 18-27 years (n=210, 27.0%), 28-38 years (n=207, 26.6%), 39-50 years (n=189, 24.3%), and 51 years and above (n=172, 22.1%). Before conducting the ANOVA, the assumption of homogeneity of variances was tested using Levene's statistic. The assumption was met for emotional recognition (p=0.199), emotional facilitation

(p=0.423), and emotional regulation (p=0.111). For the TEIS total score, Levene's test was significant (p=0.044), indicating that variances were not homogeneous; therefore, the Welch correction was applied for this variable.

A one-way ANOVA showed that only emotional recognition differed significantly across age groups (p<0.001). Emotional facilitation, emotional regulation, and TEIS total scores did not differ significantly across age groups (p>0.05). Due to non-homogeneous variances in the TEIS total score, the Welch test was used and confirmed the non-significant result (p=0.301) indicated that TEIS total scores did not differ across age groups (**Table 8**).

Table 5. The Internal Consistency, Mean, Standard Deviation, Skewness and Kurtosis values of the TEIS Subscales

	α	x̄	SD	Skewness	Kurtosis
Emotional Recognition	0.74	22.53	3.43	-0.38	1.20
Emotional Facilitation	0.62	21.56	3.52	-0.24	0.29
Emotional Regulation	0.81	28.61	5.02	-0.29	0.36
TEIS Total	0.84	72.71	9.36	-0.10	1.68

Note. TEIS: Trait Emotional Intelligence Scale

Discussion

This study aimed to adapt the Emotional Intelligence Scale (TEIS), developed by Lee and Kwak (2012), to Turkish and examine its psychometric properties. The findings demonstrated that the scale is a valid and reliable measurement tool in Turkish culture. Based on a temperament-based approach (Petrides and Furnham, 2001), that grounds emotional intelligence in an individual's subjective assessments, the Emotional Intelligence Scale comprehensively addresses an individual's awareness of emotions, their ability to cope with these emotions, and their capacity to manage these emotions within a relational context.

Table 6. Test-Retest Correlations for TEIS Subscales and Total Score

	T1 x̄ (SD)	T2 x̄ (SD)	r	p
Emotional Recognition	23.66 (2.85)	23.94 (5.47)	0.66	**<0.001**
Emotional Facilitation	21.25 (3.15)	21.69 (5.69)	0.59	**<0.001**
Emotional Regulation	29.01 (5.10)	29.06 (7.19)	0.77	**<0.001**
TEIS Total	73.78 (8.82)	74.68 (10.76)	0.81	**<0.001**

Note. TEIS: Trait Emotional Intelligence Scale

The exploratory factor analysis conducted in this study clearly and theoretically consistent the expected three-dimensional structure of the scale. The first factor, "emotional recognition/understanding," consisted of items reflecting individuals' ability to distinguish their own emotional states from the emotions of others. The items' moderate-to-high factor loadings indicated the structural strength of this dimension (Shrestha, 2021). The second factor, "emotional facilitation," encompassed processes such as the influence of emotions on behavior, composure in challenging situations, and engagement with the positive experiences of others (Lee & Kvak, 2012). Although the loadings of items in this dimension varied more widely than those in other factors, the dimension was generally found to support the theoretical structure (Shrestha, 2021). The third factor, "emotional regulation," emerged as the strongest and most distinct factor, and items representing individuals' ability to control their emotions, adapt to the situation, and maintain emotional balance despite negativity (Lee & Kvak, 2012) clearly supported this structure. The fact that three factors explained a significant portion of the total variance demonstrates that the scale assesses emotional functioning as a multidimensional construct and contributes significantly to the scale's structural validity (Kline, 2015). These findings generally indicate that the scale exhibits a culturally and conceptually functional structure in the current sample and that emotional competencies consist of separable but related components.

Construct validity findings suggest that emotional intelligence can be considered a holistic construct, but the contributions of its sub-dimensions cannot be ignored. This demonstrates theoretical similarity to the four-factor model based on cognitive ability proposed by Mayer and colleagues (2000). However, the findings also support Lee and Kwak's (2012) approach, suggesting that emotional intelligence is not merely a cognitive capacity but also a structure intertwined with an individual's temperamental tendencies. Emotions, in their most general sense, are multidimensional constructs encompassing an individual's physiological arousal, subjective experience, and outward expressions (Scherer, 2005). These constructs emerge as a result of the interaction of both an individual's internal processes and their environmental conditions (Scherer, 2009). While emotions can be shaped by cultural and interpersonal interactions, their fundamental functions such as enabling living beings to give meaning to environmental stimuli, guide their behavior, and maintain social communication, are considered universal. Within this framework, it can be argued that the ways individuals perceive and express emotions are also shaped by the cultural norms and societal values they live in (Kağıtçıbaşı, 2014). Considering these cultural dynamics, it can be said that assessing emotional intelligence with a measurement tool based on subjective statements can produce more context-sensitive and meaningful results. As Petrides and Furnham (2001) stated, the theoretical framework in which emotional intelligence is addressed directly affects both the measurement tool to be used and how the findings will be interpreted.

Findings supporting the convergent validity of the scale were evaluated on the basis of significant relationships established with mentalizing capacity, which is closely related to emotional intelligence, and an alternative emotional intelligence scale. While the scale used is a self-report-based trait emotional intelligence scale, the findings are notably theoretically parallel to the Four-Branch Ability EI Model developed by Mayer and colleagues (2016). This parallelism stems particularly from the correlations revealed with the sub-dimensions of the mentalizing scale. Indeed, the highest correlation between emotional intelligence scores and the MentS Others dimension suggests that this construct is more closely linked to the capacity to understand others' thoughts and feelings. In contrast, the correlations with the MentS Self dimension, while significant, were relatively low. This finding suggests that emotional intelligence is more strongly related to the ability to grasp and utilize others' emotions in social-cognitive processes than to understanding one's own emotions. Therefore, the close relationship between emotional intelligence and mentalizing suggests a shared functionality, particularly in areas such as interpersonal adjustment, social understanding, and guiding emotional thinking. While the scale used in this study is a self-reported trait EI scale, the findings theoretically parallel components such as "understanding others' emotions" and "guiding thinking with emotions" identified in Mayer et al.'s (2016) ability EI model. This suggests that although trait and ability EI conceptualizations are based on different measurement conventions, they share some commonalities.

Table 7. Results of t-Test Analysis on Comparison of Subscales by Gender

	Female N=417		Male N=361					95% CI	
	x̄	SD	x̄	SD	t	df	p	Low	High
Emotional Recognition	22.82	3.40	22.20	3.45	2.52	776	**0.012**	0.13	1.10
Emotional Facilitation	21.19	3.50	21.99	3.52	-3.15	776	**0.002**	-1.29	-0.30
Emotional Regulation	28.17	5.17	29.13	4.79	-2.68	776	**0.008**	-1.66	-0.25
TEIS Total	72.19	9.31	73.32	9.40	-1.69	776	0.092	-2.45	0.19

Note. TEIS: Trait Emotional Intelligence Scale

Incremental validity analyses provide important clues for a deeper understanding of the predictive power of emotional intelligence on psychological symptoms. In this context, multiple regression analyses using both the Rotterdam Scale for Emotional Intelligence (REIS) and the TEIS (Trait Emotional Intelligence Scale) showed that the TEIS, compared to the REIS, provided a stronger predictive value for depression, anxiety, obsessive-compulsive symptoms, and somatization levels. These findings indicate that the personality-based approach to emotional intelligence is particularly effective in assessing individuals' subjective experiences and internal processes. Trait-based emotional intelligence encompasses an individual's beliefs about the extent to which they can recognize and regulate their emotions (Petrides & Furnham, 2001). Therefore, the higher explanatory power of the TEIS compared to the REIS can be explained by the fact that the TEIS incorporates an individual's self-assessment of their emotional capacity.

Table 8. One-Way ANOVA Results Comparing Emotional Intelligence Components Across Age Groups

	Age Groups	N	x̄	SD	Sum of Squares	df	Mean Square	F	p	Differences
Emotional Recognition	18-27	210	23.62	2.99	Between Groups	368.490	122.830	10.805	**<0.001**	18-27>28-38
	28-38	207	22.31	3.37	Within Groups	8799.073	11.368			18-27>39-50
	39-50	189	22.26	3.33	Total	9167.563				18-27>51-63
	51-63	172	21.78	3.82						
Emotional Facilitation	18-27	210	21.19	3.44	Between Groups	58.722	19.574	1.576	0.194	-
	28-38	207	21.62	3.48	Within Groups	9614.691	12.422			
	39-50	189	21.95	3.35	Total	9673.414				
	51-63	172	21.53	3.85						
Emotional Regulation	18-27	210	28.81	4.78	Between Groups	14.469	4.823	.191	0.903	-
	28-38	207	28.51	4.93	Within Groups	19562.077	25.274			
	39-50	189	28.63	4.73	Total	19576.546				
	51-63	172	28.47	5.70						
TEIS Total	18-27	210	73.62	8.54	Between Groups	340.452	113.484	1.296	0.275	-
	28-38	207	72.44	9.17	Within Groups	67765.478	87.552			
	39-50	189	72.84	8.60	Total	68105.929				
	51-63	172	71.78	11.16						

Note. TEIS: Trait Emotional Intelligence Scale

On the other hand, the REIS focuses on both self-focused and other-focused emotional appraisal and regulation processes, encompassing more general social-emotional functions (Pekaar et al., 2018). However, this hybrid structure may be limited in adequately distinguishing internal emotion regulation difficulties associated with

specific psychological symptoms. In contrast, the TEIS's sub-dimensions, emotional recognition, facilitation, and regulation, demonstrate more significant relationships, particularly in explaining internal distress, suggesting that this scale has a higher theoretical fit with the target constructs.

Another notable finding of the study is that the TEIS significantly predicts psychological symptom levels, demonstrating that a personality-based understanding of emotional intelligence is closely related to an individual's resilience, ability to cope with stress, and internal regulatory capacity. This suggests that, as argued by Petrides and Furnham (2001), emotional intelligence is more closely related to an individual's resilience, capacity to cope with stress, and internal regulatory skills when measured based on temperamental traits.

The internal consistency of the scale used in the study was assessed using various methods, including test-retest reliability and split-half reliability. First, Cronbach's alpha coefficients revealed acceptable internal consistency for both the total score and its subscales. The Emotional Identification and Emotional Regulation subscales were particularly notable for their high reliability values, while the Emotional Facilitation subscale had a lower reliability coefficient. This suggests that some subscales are more homogeneous, while items from different constructs may coexist within other subscales. However, overall, the reliability coefficients for all subscales and the total score were within psychometrically acceptable limits.

Test-retest analyses were conducted to assess the scale's stability over time, and the resulting correlation coefficients indicate that all dimensions and the total score consistently measure emotional competence over time. This finding suggests that the scale measures not only immediate emotional skills but also individuals' more enduring levels of emotional competence. This aspect of the scale provides a significant advantage, particularly in studies aimed at monitoring developmental processes or evaluating the impact of intervention programs.

Furthermore, the Spearman-Brown and Guttman coefficients obtained in split-half reliability analyses revealed that the scale's structural integrity was adequate. The similar level of internal consistency when the scale was divided into two equal parts reinforces its homogeneity and reliability. These findings demonstrate that scores obtained from the scale's different subtests function similarly and that the overall structure is consistently aligned with the measurement purpose.

Findings regarding gender differences revealed that women have higher levels of awareness in the emotion recognition dimension, while men score higher in the emotional facilitation and regulation dimensions. These findings can be explained by Goleman's (1995) approach, which links emotional intelligence to social adaptation and motivation. Women's higher scores in empathy and emotional sensitivity may be related to their experiencing emotions more intensely and explicitly due to the influence of gender roles (Christov-Moore et al., 2014), while men's greater effectiveness in goal-oriented emotional regulation skills may be attributed to their tendency to use emotions as functional tools (Tamres et al., 2002).

In the study, it was determined that only emotional recognition scores differed significantly between age groups, and the highest scores were observed in young adults. This finding suggests that the ability to quickly and accurately discriminate emotional expressions may decline with age. The finding that young adults had higher emotional recognition scores in the current study is also consistent with recent research examining emotion recognition from facial expressions. For example, Kim et al. (2021) reported that emotions were identified most accurately in young adults and least accurately in older adults across four different facial emotion recognition systems. Similarly, a meta-analytic study has shown that older adults consistently perform more poorly than younger adults in recognizing a range of emotional expressions, particularly anger and sadness, across multiple modalities (Ruffman et al., 2008). These converging findings support the notion that age-related changes in social cognition, possibly driven by declines in processing speed, attentional flexibility, and neural efficiency in emotion-related brain regions, may underlie the reduced accuracy observed in older age groups (Salthouse, 1996). In contrast, no age-related differences were observed in emotional facilitation, emotional regulation, or TEIS total scores. This suggests that higher-order skills such as incorporating emotions into thinking, managing emotions, and general emotional competence remain relatively stable throughout adulthood. Therefore, the findings suggest that the ability to perceive and analyze emotional cues may decline somewhat with age, whereas other dimensions of emotional intelligence are preserved throughout adulthood.

Lee and Kwak (2012) note that the concept of "jeong," a unique form of affect in Korean culture, forms an important social connective tissue that shapes emotional intelligence (Chung & Oh, 2022). Similarly, in Turkish culture, concepts such as "bond of the heart (gönül bağı)" or "sincere attachment (içtenlikle bağlanma)" demonstrate that relational emotions play a central role in interpersonal interactions (Turkish Language Association [TDK], 2025). The fact that some items in the scale refer to such relational emotions may explain the high validity values obtained in the Turkish sample. In this respect, developing or adapting instruments measuring emotional intelligence in a way

sensitive to cultural context is a key factor in enhancing the validity of the measure.

In conclusion, the findings of this study demonstrate that the trait-based emotional intelligence approach has both theoretical and measurement relevance in a Turkish sample. In particular, the inclusion of culturally specific emotional constructs in the measurement process will contribute to cross-cultural comparisons in this area. Future studies could contribute to comprehensive testing of this scale by examining the predictive power of emotional intelligence in areas such as individuals' life satisfaction, professional success, or relational satisfaction.

Limitations: While the findings of this study offer significant contributions, some limitations should be considered. The data used in the study were collected through self-reporting. This method can introduce measurement bias due to participants' tendency to overestimate their emotional traits. The subjective nature of emotional intelligence can exacerbate this bias. Furthermore, because convenience sampling was used in the data collection process, the generalizability of the results to the entire adult population in Turkey is limited. The limited representation of different socioeconomic or cultural subgroups may limit the scope of the findings.

Although convergent and incremental validity analyses were conducted in the study, divergent validity, which would demonstrate the extent to which the scale differs from other emotional or personality-based constructs, was not examined more comprehensively. Future evaluation of this area with more robust methods could further clarify the scale's theoretical position.

The cross-sectional design of the study does not allow for the analysis of changes in emotional intelligence over time or the causal direction of its relationships with psychological variables. Longitudinal designs will contribute to a better understanding of how emotional intelligence changes over developmental processes and under what conditions its interaction with different psychological characteristics becomes stronger.

Author Contributions: **B.G.** design of the study, literature review, collection, processing and interpretation of data, drafted manuscript, approval of the final version to be published, critical revision. **E.C.** design of the study, literature review, collection, processing and interpretation of data, drafted manuscript, approval of the final version to be published. **M.S.** design of the study, literature review, collection, processing and interpretation of data, drafted manuscript, approval of the final version to be published.

Data Availability Statement: The datasets generated during and/or analyzed during the current study are available from the corresponding author on reasonable request.

Declaration of Conflicting Interests: Authors declared no potential conflicts of interest with respect to the research, authorship, and/or publication of this article.

Source(s) of Support: The authors did not receive support from any organization for the submitted work.

References

Bar-On, R. (2004). The Bar-On Emotional Quotient Inventory (EQ-i): Rationale, description and summary of psychometric properties. In G. Geher (Ed.), *Measuring emotional intelligence: Common ground and controversy* (pp. 115-145). Nova Science Publishers.

Bar-On, R. (2006). The Bar-On model of emotional-social intelligence (ESI). *Psicothema*, *18*(Suppl), 13-25.

Brown, T. A. (2015). *Confirmatory factor analysis for applied research* (2nd ed.). The Guilford Press.

Cherniss, C. (2010). Emotional intelligence: Toward clarification of a concept. *Industrial and Organizational Psychology: Perspectives on Science and Practice*, *3*(2), 110-126. https://doi.org/10.1111/j.1754-9434.2010.01231.x

Cheung, G. W., Cooper-Thomas, H. D., Lau, R. S., & Wang, L. C. (2024). Reporting reliability, convergent and discriminant validity with structural equation modeling: A review and best-practice recommendations. *Asia Pacific Journal of Management*, *41*(2), 745-783. https://doi.org/10.1007/s10490-023-09871-y

Christov-Moore, L., Simpson, E. A., Coudé, G., Grigaityte, K., Iacoboni, M., & Ferrari, P. F. (2014). Empathy: Gender effects in brain and behavior. *Neuroscience and Biobehavioral Reviews*, *46 Pt 4*(Pt 4), 604-627. https://doi.org/10.1016/j.neubiorev.2014.09.001

Chung, E. Y. J., Oh, J. S. (2022). Conclusion: The diversity, dynamics, and distinctiveness of Korean Jeong. In E. Y. J Chung & J. S. Oh (Eds.), *Emotions in Korean philosophy and religion. Palgrave studies in comparative east-west philosophy*. Palgrave Macmillan, Cham. https://doi.org/10.1007/978-3-030-94747-7_13

Derogatis, L. R. (1992). *The Brief Symptom Inventory (BSI): Administration, scoring, and procedures manual*. Clinical Psychometric Research.

Dimitrijević, A., Hanak, N., Altaras Dimitrijević, A., & Jolić Marjanović, Z. (2018). The Mentalization Scale (MentS): A self-report measure for the assessment of mentalizing capacity. *Journal of Personality Assessment*, *100*(3), 268-280. https://doi.org/10.1080/00223891.2017.1310730

Fernández-Berrocal, P., & Extremera, N. (2006). Emotional intelligence: A theoretical and empirical review of its first 15 years of history. *Psicothema*, *18 Suppl*, 7-12.

Goleman, D. (1995). *Emotional intelligence: Why it can matter more than IQ for character health and lifelong achievement*. Bantam Books.

Hu, L., & Bentler, P. M. (1999). Cutoff criteria for fit indexes in covariance structure analysis: Conventional criteria versus new alternatives. *Structural Equation Modeling: A Multidisciplinary Journal*, *6*(1), 1-55. https://doi.org/10.1080/10705519909540118

Joseph, D. L., & Newman, D. A. (2010). Emotional intelligence: An integrative meta-analysis and cascading model. *Journal of Applied Psychology*, *95*(1), 54-78. https://doi.org/10.1037/a0017286

Kağıtçıbaşı, Ç. (2014). *Dünden bugüne insan ve insanlar: Sosyal psikolojiye giriş*. Evrim Yayınları.

Kim, E. S., Bryant, D. G., Srikanth, D., & Howard, A. M. (2021). Age bias in emotion detection: An analysis of facial emotion recognition performance on young, middle-aged, and older adults. *Proceedings of the 2021 AAAI/ACM Conference on AI, Ethics, and Society*.

Kline, P. (2015). *A handbook of test construction (psychology revivals): Introduction to psychometric design*. Routledge.

Kline, R. B. (2016). *Principles and practice of structural equation modeling* (4th ed.). The Guilford Press.

Lee, H., & Kwak, Y. (2012). Development and initial validation of a trait emotional intelligence scale for Korean adults. *Asia Pacific Education Review*, *13*(2), 209-217. https://doi.org/10.1007/s12564-011-9175-8

MacCallum, R. C., Browne, M. W., & Sugawara, H. M. (1996). Power analysis and determination of sample size for covariance structure modeling. *Psychological Methods*, *1*(2), 130-149. https://doi.org/10.1037/1082-989X.1.2.130

MacCann, C., Jiang, Y., Brown, L. E. R., Double, K. S., Bucich, M., & Minbashian, A. (2020). Emotional intelligence predicts academic performance: A meta-analysis. *Psychological Bulletin*, *146*(2), 150-186. https://doi.org/10.1037/bul0000219

Matthews, G., Zeidner, M., & Roberts, R. D. (2002). *Emotional intelligence: Science and myth.* Boston Review.

Mayer, J. D., & Salovey, P. (1997). What is emotional intelligence? In P. Salovey & D. J. Sluyter (Eds.), *Emotional development and emotional intelligence: Educational implications* (pp. 3-34). Basic Books.

Mayer, J. D., Caruso, D. R., & Salovey, P. (2016). The ability model of emotional intelligence: Principles and updates. *Emotion Review, 8*(4), 290-300. https://doi.org/10.1177/1754073916639667

Mayer, J. D., Salovey, P., & Caruso, D. (2000). Models of emotional intelligence. In R. J. Sternberg (Ed.), *Handbook of intelligence* (pp. 396-420). Cambridge University Press. https://doi.org/10.1017/CBO9780511807947.019

Mayer, J. D., Salovey, P., & Caruso, D. R. (2002). *Mayer-Salovey-Caruso Emotional Intelligence Test (MSCEIT) User's Manual.* MHS Publishers.

McCrae, R. R., Kurtz, J. E., Yamagata, S., & Terracciano, A. (2011). Internal consistency, retest reliability, and their implications for personality scale validity. *Personality and social psychology review: An official journal of the Society for Personality and Social Psychology, Inc*, *15*(1), 28-50. https://doi.org/10.1177/1088868310366253

O'Boyle, E. H., Jr., Humphrey, R. H., Pollack, J. M., Hawver, T. H., & Story, P. A. (2011). The relation between emotional intelligence and job performance: A meta-analysis. *Journal of Organizational Behavior*, *32*(5), 788-818. https://doi.org/10.1002/job.714

Palmer, B., Donaldson, C., & Stough, C. (2002). Emotional intelligence and life satisfaction. *Personality and Individual Differences*, *33*(7), 1091-1100. https://doi.org/10.1016/S0191-8869(01)00215-X

Pekaar, K. A., Bakker, A. B., van der Linden, D., & Born, M. P. (2018). Self- and other-focused emotional intelligence: Development and validation of the Rotterdam Emotional Intelligence Scale (REIS). *Personality and Individual Differences*, *120,* 222-233. https://doi.org/10.1016/j.paid.2017.08.045

Petrides, K. V. (2009). Psychometric properties of the Trait Emotional Intelligence Questionnaire. In C. Stough, D. H. Saklofske & J. D. Parker (Eds.), *Advances in the assessment of emotional intelligence.* Springer. https://doi.org/10.1007/978-0-387-88370-0_5

Petrides, K. V., & Furnham, A. (2001). Trait emotional intelligence: Psychometric investigation with reference to established trait taxonomies. *European Journal of Personality*, *15*(6), 425-448. https://doi.org/10.1002/per.416

Reise, S. P. (2012). The rediscovery of bifactor measurement models. *Multivariate Behavioral Research*, *47*(5), 667-696. https://doi.org/10.1080/00273171.2012.715555

Ruffman, T., Henry, J. D., Livingstone, V., & Phillips, L. H. (2008). A meta-analytic review of emotion recognition and aging: Implications for neuropsychological models of aging. *Neuroscience and Biobehavioral Reviews*, *32*(4), 863-881. https://doi.org/10.1016/j.neubiorev.2008.01.001

Salovey, P., & Mayer, J. D. (1990). Emotional intelligence. *Imagination, Cognition and Personality*, *9*(3), 185-211. https://doi.org/10.2190/DUGG-P24E-52WK-6CDG

Salthouse T. A. (1996). The processing-speed theory of adult age differences in cognition. *Psychological Review*, *103*(3), 403-428. https://doi.org/10.1037/0033-295x.103.3.403

Scherer, K. R. (2005). What are emotions? And how can they be measured? *Social Science Information*, *44*(4), 695-729. https://doi.org/10.1177/0539018405058216

Scherer, K. R. (2009). The dynamic architecture of emotion: Evidence for the component process model. *Cognition and Emotion*, *23*(7), 1307-1351. https://doi.org/10.1080/02699930902928969

Schutte, N. S., Malouff, J. M., Hall, L. E., Haggerty, D. J., Cooper, J. T., Golden, C. J., & Dornheim, L. (1998). *Schutte Self-Report Inventory (SSRI)* [Database record]. APA PsycTests. https://doi.org/10.1037/t06715-000

Schutte, N. S., Malouff, J. M., Thorsteinsson, E. B., Bhullar, N., & Rooke, S. E. (2007). A meta-analytic investigation of the relationship between emotional intelligence and health. *Personality and Individual Differences*, *42*(6), 921-933. https://doi.org/10.1016/j.paid.2006.09.003

Shrestha, N. (2021). Factor Analysis as a Tool for Survey Analysis. *American Journal of Applied Mathematics and Statistics*, *9*(1), 4-11.

Şahin, N. H., & Durak, A. (1994). Kısa Semptom Envanteri: Türk gençleri için uyarlanması. *Türk Psikoloji Dergisi*, *9*(31), 44-56.

Tabachnick, B. G., & Fidell, L. S. (2007). *Using multivariate statistics* (5th Ed.). Allyn and Bacon.

Tamres, L. K., Janicki, D., & Helgeson, V. S. (2002). Sex differences in coping behavior: A meta-analytic review and an examination of relative coping. *Personality and Social Psychology Review, 6*(1), 2-30. https://doi.org/10.1207/S15327957PSPR0601_1

Tanrıöğen, A., & Türker, Y. (2019). Rotterdam Duygusal Zekâ Ölçeği'nin Türkçeye uyarlanması. *Pamukkale Üniversitesi Eğitim Fakültesi Dergisi*, *47*, 348-369. https://doi.org/10.9779/pauefd.514377

Törenli-Kaya, Z., Alpay, E. H., Türkkal Yenigüç, Ş., & Özçürümez Bilgili, G. (2023). Validity and reliability of the Turkish Version of the Mentalization Scale (MentS). *Turkish Journal of Psychiatry*, *34*(2), 118-124. https://doi.org/10.5080/u25692

Turkish Language Association. (2025). *Güncel Türkçe sözlük.* Accessed on 14.11.2025 from https://sozluk.gov.tr

Appendix

Duygusal Zekâ Ölçeği

Her sorunun karşısında bulunan;

1=Hiç Katılmıyorum, 2=Katılmıyorum, 3=Kararsızım, 4=Katılıyorum, 5=Tamamen Katılıyorum anlamına gelmektedir. Lütfen her ifadeye mutlaka TEK yanıt veriniz ve boş bırakmayınız.

		1	2	3	4	5
1.	Başkalarını çok iyi tanımasam bile onların duygularını ve ruh hallerini anlayabilirim.					
2.	Başka insanların duygularını ve ruh hallerini onların ses tonlarından ve yüz ifadelerinden anlayabilirim.					
3.	Kendi duygularımı ve başkalarının duygularını isimlendirebilirim.					
4.	Resimlerde ve müzikte ifade edilen duyguları ve hisleri anlayabilirim.					
5.	Karmaşık ve hassas duyguların veya hislerin var olduğunu anlayabilirim.					
6.	Bir insanın diğer bir insandan aynı anda hem nefret edip hem de onu sevebileceğini anlayabilirim.					
7.	Hoşlanmadığım bir şeyi yapmak zorunda kalırsam, fikrimi değiştirmeye ve bundan keyif almaya çalışırım.					
8.	Bir görevi tamamladıktan sonra kendimi boş hissettiğimde neşelenmeye çalışır ve bir sonraki etkinlik için hazır olurum.					
9.	Bir işi yapmak istemediğimde, duygularımın üstesinden gelmek için elimden geleni yaparım.					
10.	Eğer meslektaşım hakkında iyi bir haber duyarsam, mutlu olur ve beraber kutlamak isterim.					
11.	Kötü şeyleri çabucak unutmaya çalışırım.					
12.	Bir şeyden korktuğumda kaçmak yerine korkumla yüzleşirim.					
13.	Duygularımı iyi bir şekilde kontrol edebilirim.					
14.	Depresif hissettiğimde ruh halimi değiştirebilirim.					
15.	Kendimi kötü hissettiğimde neşelenmek için kendi yöntemlerim vardır.					
16.	Öfkemin üstesinden gelmeyi bilirim.					
17.	Duygularımı duruma göre değiştirebilirim.					
18.	İşler yolunda gitmediğinde bile umudumu kaybetmem.					
19.	İşlerimi düzenli bir şekilde yapmak için duygularımı düzenleyebilirim.					
20.	Başkalarını etkili bir biçimde teselli edebilir ve rahatlatabilirim.					